MINUTES

MONTANA SENATE
51st LEGISLATURE - REGULAR SESSION

COMMITTEE ON TAXATION

Call to Order: By Chairman Bob Brown, on January 19, 1989, at 8:00 a.m.

ROLL CALL

Members Present: Chairman Brown, Vice Chairman Hager, Senator Bishop, Senator Crippen, Senator Eck, Senator Gage, Senator Halligan, Senator Harp, Senator Mazurek, Senator Norman, Senator Severson, Senator Walker.

Members Excused: None

Members Absent: None

Staff Present: Greg Petesch, Legislative Council Researcher, Jill Rohyans, Committee Secretary.

Announcements/Discussion: None

HEARING ON SENATE BILL 117

Presentation and Opening Statement by Sponsor: Senator Keating, District 44, sponsor, said the bill is quite short and looks very simple, but it has a great number of ramifications. The people of Montana voted into the Constitution a provision that one half of the coal severance tax would be placed in a permanent inviolable trust fund for future generations, or the reclamation of the land which had been mined. In the last session the legislature reduced the tax rate on coal from 30% to a declining rate over several years to 15%. With the declining rate, there are corresponding declining revenues. That is the reason the bill is offered to the people as a referendum to amend the Constitution to divert the coal tax to the general fund rather than to the permanent trust. It caps the permanent coal tax trust fund by a vote of the people. The legislature can appropriate money from the trust fund with a 3/4 vote of both houses, but only the people can change the Constitution, which is why this bill is a referendum measure. It is important to do this because of declining revenues in the coal trust fund and declining revenues in the state. In general, we are going to need other sources of revenue to run the state now and in the future.

Senator Keating stated that the trust was originally established for two reasons:

The first was to establish a legacy for future generations when the coal is gone. At the current rate of mining, it will take 2000 years or 40 generations to mine all the coal. To hold $400 million in trust for 40 generations seems somewhat ridiculous.

The second reason for establishing the trust fund was to provide for the reclamation of the land. The coal companies are reclaiming the land at their own expense and not one dime of coal tax money has been used for reclamation.

Senator Keating felt the reasons for the trust fund are now invalid. He felt this generation provides the workers, the investment, and the labor for producing the coal and generating the tax, and it is only right they use the taxes they generate.

Senator Keating presented a flow chart (exhibit 1) which shows half of the coal tax money on its way to the coal tax fund goes through a bonding sub fund. Seventy-five percent of the fifty percent is used as collateral for the water bonding program. There are $55 million worth of water bonds with an annual payment on those bonds of $6.5 million, $6 million is paid back from the water projects themselves; only .5 million is paid from the trust fund towards the retirement of the bonds. The interest is heavy in the early part of the bond and lightens toward the end and eventually it will all be recovered from the water bonds themselves.

The other bonding fund is the Montana Instate Investment Fund of about $50 million, $20 million is loaned out for various economic loans, all of which are solvent, and with a return of about 8 1/2 - 9%. However, there is no opportunity for use of the other $30 million. The money stays in the bonding fund for 90 days to six months and then flows on into the permanent trust fund.

As of June 30, 1988, the balance of the trust fund was $360 million. Senator Keating referred to his sheet of yearly deposits and projections (exhibits 2 and 3). The year 1991 would be the end of the period of constitutional flow to the trust fund. Senate Bill 117 would not be presented for a vote until November 1990 and would not become law if it passed until sometime in 1991. At that point, June 1991, the balance of the trust fund would be $440,000,000.

The referendum does not touch the fund, it simply disperses 85% of the interest income to the general fund with the other 15% returning to the trust to affect inflation.

Senator Keating referred to the last page of exhibit 4, which details the distribution of monies from the coal tax into various funds. There is a great deal of concern about the flow and amount of coal tax revenue. With the tax cut from 30% to 15%, if the price of coal stays low and the volume of coal remains the same, all the statutory appropriations are going to decline in value as well. Other sources of revenue are going to be needed to fund the projects which are dependent on the coal tax money. The logical place to look would be the general fund.

Senator Keating distributed further information on accounts which use coal tax money (exhibits 5 and 6).

Senator Keating pointed out we have built a huge trust fund that provides interest income for general use. We have enough set aside for a rainy day. The coal companies are doing their own reclamation, and the future generations have enough coal for themselves. Now we are in a crunch and are facing a severe decline in the revenues on which we have become dependent in the last ten years. He said it is time to divert all the coal tax money to current use and ask the people to place a cap on the trust fund.

List of Testifying Proponents and What Group they Represent:

James Mockler, Executive Director, Montana Coal Council
Dennis Burr, Montana Taxpayers Association
Dan Ingels, Montana Chamber of Commerce

Testimony:

James Mockler, Executive Director, Montana Coal Council, said he appreciated the support the legislature gave in lowering the coal tax and noted the increased coal production that has brought about. He said the budget needs money from the fund to pay for state services. He pointed out the legislature can decide when and if the tax fund needs to be built up, but if tax increases are necessary, then the people should have the chance to vote on this option.

Dennis Burr, Montana Taxpayers Association, said their interest in the bill is based on the fact it may not be possible to balance the budget from the general fund this session without some extra revenue. In order to provide personal property tax relief, extra funds will have to be found. The amount of money going into the coal tax trust is about $22 million a year. That is comparable to what the 10% income tax surcharge raises. If the people were given a choice of diverting the coal tax money or the income tax surcharge, he felt they would choose the coal tax revenues.

Dan Ingels, Montana Chamber of Commerce, said now is the time to submit the issue to voter review.

List of Testifying Opponents and What Group They Represent:

Senator Chet Blaylock, District 43
Bob Dozier, Nothern Plains Resource Council
Kim Wilson, Montana Chapter Sierra Club
Phil Campbell, representing Montana Education Association
Margaret Davis, League of Women Voters, Montana
Rock Ringling, Montana Alliance for Progressive Policy
Chris Kaufman, Montana Environmental Information Center

Testimony:

Senator Chet Blaylock, district 43, traced the history of the coal tax trust fund from its inception in 1975 to the present. He pointed out the coal trust is the only way to preserve some of the value of the coal for use of our children and grandchildren. After the state income tax the next biggest source of revenue in the state is the interest from the coal tax trust fund. This is a big part of the budget that is being used all the time. If it is capped, it will never grow. If we tap into it, it will be gone in two bienniums. He said forty generations worth of coal may be impacted by the greenhouse effect where we can burn no more coal, or a breakthrough in fusion which scientists say could happen by 2020. He felt to tap into those coal tax funds would be a gross error and a breach of trust.

Bob Dozier, Northern Plains Resource Council, presented his written testimony in opposition to the bill. (Exhibit 7)

Phil Campbell, representing the Montana Education Association, said they do support the referendum process but oppose the bill. He feels if this referendum comes from the legislature, it sends a message to the people that this is a good idea. The Montana Education Association feels it is bad policy and if the people want to do it, they should bring it to a vote. He said the very fact the various programs such as highway reconstruction, education trust, conservation districts (and others listed in exhibit 4) depend on the coal tax revenues is argument enough not to tap the fund for the general fund.

Margaret Davis, League of Women Voters of Montana, presented her testimony in opposition to the bill. (Exhibit 9)

Rock Ringling, Montana Alliance for Progressive Policy, felt this bill will increase the state's reliance on one source of revenue. He said there is no guarantee coal production will remain at current levels or increase, and the greenhouse effect and acid rains are certainly potential problems. He suggested looking at Wyoming with a trust fund of approximately $800 million. If they didn't have it, they would be destitute. surrounding states such as North and South Dakota, Idaho, and Wyoming all have tax policies and trust funds that have saved them from increased tax impacts and would bear close scrutiny from Montana. If the fund was capped in 1985, we wouldn't be looking for revenue now.

Chris Kaufman, Montana Environmental Information Center, opposed the bill. she said the fund was established for future generations, not the expenses of running the state. She said the social and ecological impacts of the future are uncertain. We can't be reliant on one industry for the funding of our state.

<u>Questions From Committee Members:</u> Senator Gage asked how much of the decrease in the coal tax revenue is due to the Crow case.

Mr. Mockler said approximately 20%.

Senator Gage asked Phil Campbell how recently the MEA membership had been polled regarding this bill.

Mr. Campbell replied they hadn't been polled.

Senator Gage asked Mr. Ringling about trust funds in our surrounding states.

Mr. Ringling replied North Dakota, South Dakota and Wyoming have trust funds run by oil, gas and coal.

Senator Crippen asked Mr. Campbell if MEA would oppose the referendum if it came from the people.

Mr. Campbell replied the MEA would necessarily oppose it.

Senator Crippen asked Mr. Ringling to provide the committee with the figures on trust funds in the surrounding states.

Senator Halligan said he has not been inundated with requests to cap the trust. He wondered where the public outcry and support was coming from.

Senator Keating said he has had a great deal of input from people in Billings and the eastern part of the state regarding capping the trust. He felt the people in Western Montana are more the benefactors as they have received most of the investment money. Therefore, they are not complaining.

Senator Eck asked if the Montana Chamber of Commerce supports the direction taken by back bonds for economic development as has been done in the Build Montana Program.

Mr. Ingels said they are appreciative of that program. However, they are more concerned with eliminating the "disincentives" than in promoting the incentives.

Senator Eck asked if there is a cap right now.

Senator Keating said there is no cap on the permanent coal tax fund at present. There is a cap on the resource fund.

Closing by Sponsor: Senator Keating closed saying the sum of opposition testimony was "what if". That was the same comment used at the inception of the trust fund. History says we are good stewards in Montana and we continue to be. Our history is in mining and we have benefited the state as a result of that development. He felt a referendum is the right of the people and if it comes from the legislature it signifies their representatives are doing their job. It is their duty to refer questions of this import to the people. We need the revenue.

Senator Keating explained that there is coal to last for forty generations; the coal companies are reclaiming the land, and the trust will be protected and remain a secure savings account. The people need money for education, welfare, medicaid, a good work place and salaries. It's time to notify the people, explain the facts and let them make the decision.

HEARING ON SENATE BILL 97

Presentation and Opening Statement by Sponsor: Senator Jenkins, District 7, sponsor of the bill, said Senate Bill 97 is designed to give a tax break to farmers for remodeling. It encourages jobs and helps locally owned businesses compete with shopping malls. It exempts all increase in valuation from taxes for five years for class 14 (agriculture) property which has been expanded, remodeled, or improved. At the end of five years it would be taxed at 50% of the valuation and at the end of 10 years at 100%. There are exemptions for remodeling existing class 4 properties in section 2 of the bill (business and residential properties too). The taxes on the property must be current for the five years preceding the request of the exemption. Under provisions of 15-24-1501, MCA, a person can file with the city or county for a local option levy. the taxable value must increase by 2.5% to qualify, then they can qualify for 0% during construction increasing to 100% in the 5th year. This again, is a local option. New and expanding businesses can qualify under a local option beginning a 50% increasing to full taxable value in the tenth year. The people are not aware of these options and Senator Jenkins' bill is an attempt to bring these exceptions to the public for their benefit.

List of Testifying Proponents and What Group they Represent:

Don Ingels, Montana Chamber of Commerce

Testimony:

Don Ingels, Montana Chamber of Commerce, supported the concept of the bill.

List of Testifying Opponents and What Group They Represent:

Greg Groepper, Office of Public Instruction
Phil Campbell, Montana Education Association

Testimony:

Greg Groepper, Office of public Instruction, said they understand the concept but oppose the bill on the grounds that it takes away from the tax base without a replacement. He fears the foundation program might be undermined by exempting the statewide mills locally and paying the tax in one area and not in another. He feels the local statutes are adequate and don't need to be expanded statewide.

Rick Campbell, Montana Education Association, said the MEA opposes any bill which would reduce the tax base without a replacement. The MEA would not object if things were fiscally different. He felt the bill should be postponed until we know what is going to happen further into the session.

Questions From Committee Members: Senator Gage commented this doesn't take anything away from the tax base as he understood the bill.

Mr. Groepper said with the property tax freeze in place the only dynamics to the property tax base is new construction. All the personal property depreciates each year so that part of the tax base goes down. The only thing that keeps the tax base whole under I105 is the new construction, which tends to balance out the depreciation of personal property. If new construction is taken out, the tax base erodes further.

Senator Gage asked if some affirmative action would come into play in section 2, line 4.

Senator Jenkins said it isn't his intent. He felt the wording would apply statewide and would be automatic.

Senator Gage said when you remodel or build on, you add the value of the remodel as well as adding to the value of the existing property, i.e. a $10,000 remodeling would increase the value by $20,000.

Senator Norman asked how much money is being talked about.

Mr. Groepper said the Department of Revenue tracks new construction and feels it runs in the neighborhood of $50-60 million a year. This bill includes all new buildings, not just farm buildings.

Chairman Brown noted a fiscal note has been ordered.

Senator Severson asked if Senator Jenkins would be agreeable to an across the board application of the bill. Senator Jenkins had no objections.

Closing by Sponsor: Senator Jenkins closed by saying state mills are not exempted in this bill and that should be addressed. NEw businesses under class 4 do get a break at 3% for 3 years. It is hard to get an exact fiscal note because people are so unaware of the existing law that they are not using it. There is merit in the bill as it addresses tax breaks for farmers, encourages new jobs and helps existing businesses. He recommended two changes in the bill. First, he felt state mills should not be empt, and secondly he would lower the number of years to three.

ADJOURNMENT

Adjournment At: 10:00 a.m.

Bob Brown
SENATOR BOB BROWN, Chairman

BB/jdr

minl19jr.pb

ROLL CALL

TAXATION COMMITTEE

51st LEGISLATIVE SESSION -- 1989 Date 1/19/89

NAME	PRESENT	ABSENT	EXCUSED
SENATOR BROWN	X		
SENATOR BISHOP	X		
SENATOR CRIPPEN	X		
SENATOR ECK	X		
SENATOR GAGE	X		
SENATOR HAGER	X		
SENATOR HALLIGAN	X		
SENATOR HARP	X		
SENATOR MAZUREK	X		
SENATOR NORMAN	X		
SENATOR SEVERSON	X		
SENATOR WALKER	X		

Each day attach to minutes.

SENATE EXHIBIT 1 DATE 1/19/89 BILL NO. SB117

#1

CASH FLOW OF COAL SEVERANCE TAX TRUST FUND

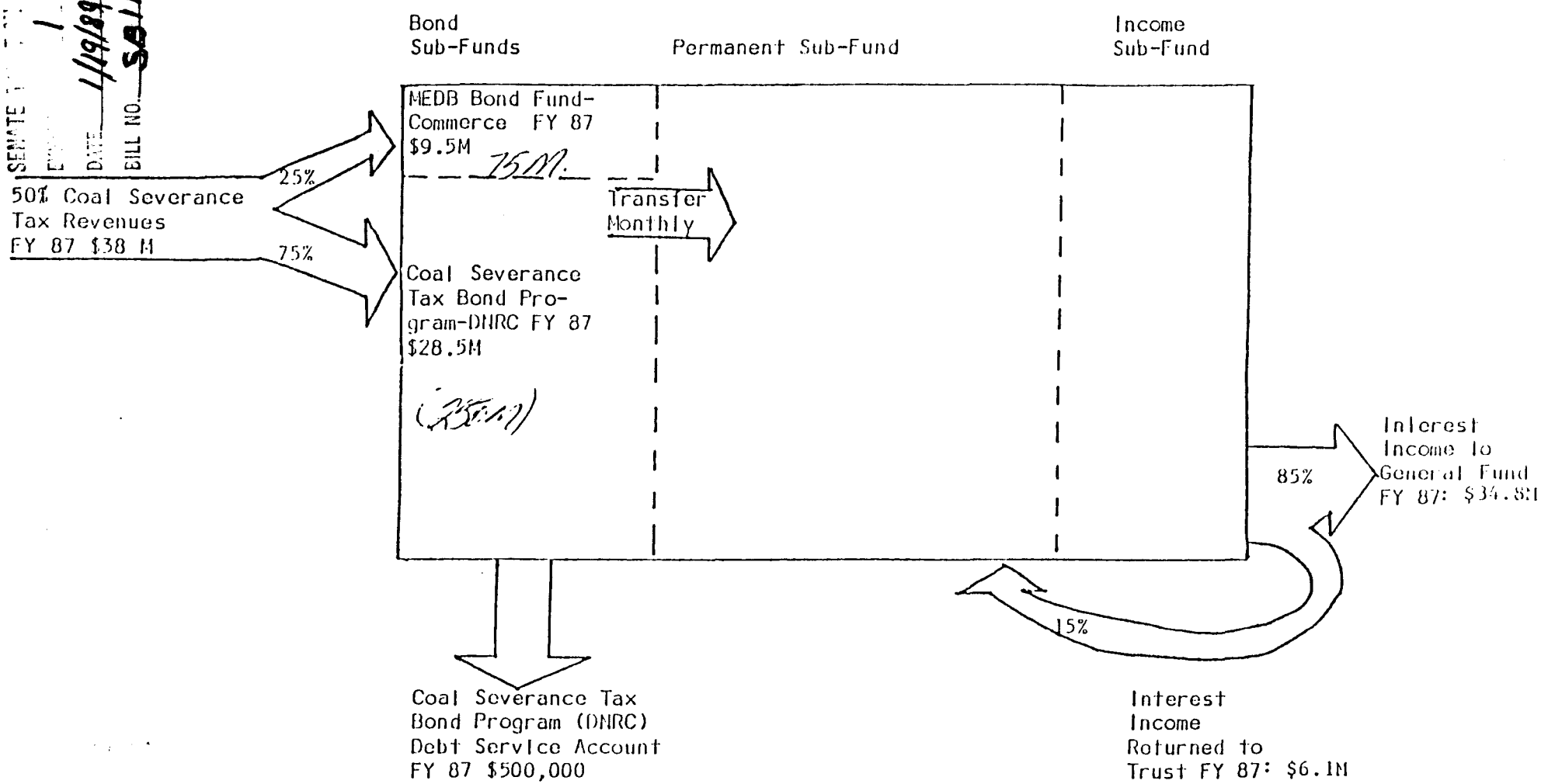

SENATE TAXATION #2
EXHIBIT NO. 2
DATE 1/19/89
BILL NO. SB 117

1-10-89 Coal Tax Deposit to the Permanent Trust Fund

Fiscal Year	
1983	$40,022,494
1984	41,411,705
1985	45,874,428
1986	42,108,607
1987	38,273,312
1988	42,319,156
	- - - - projections
1989	29,833,257
1990	26,746,111
1991	24,101,041

#3

SENATE TAXATION
EXHIBIT NO. 3
DATE 1/19/89
BILL NO. SB 117

COAL SEVERANCE TAX DEPOSIT
TO CONSTITUTIONAL TRUST FUND

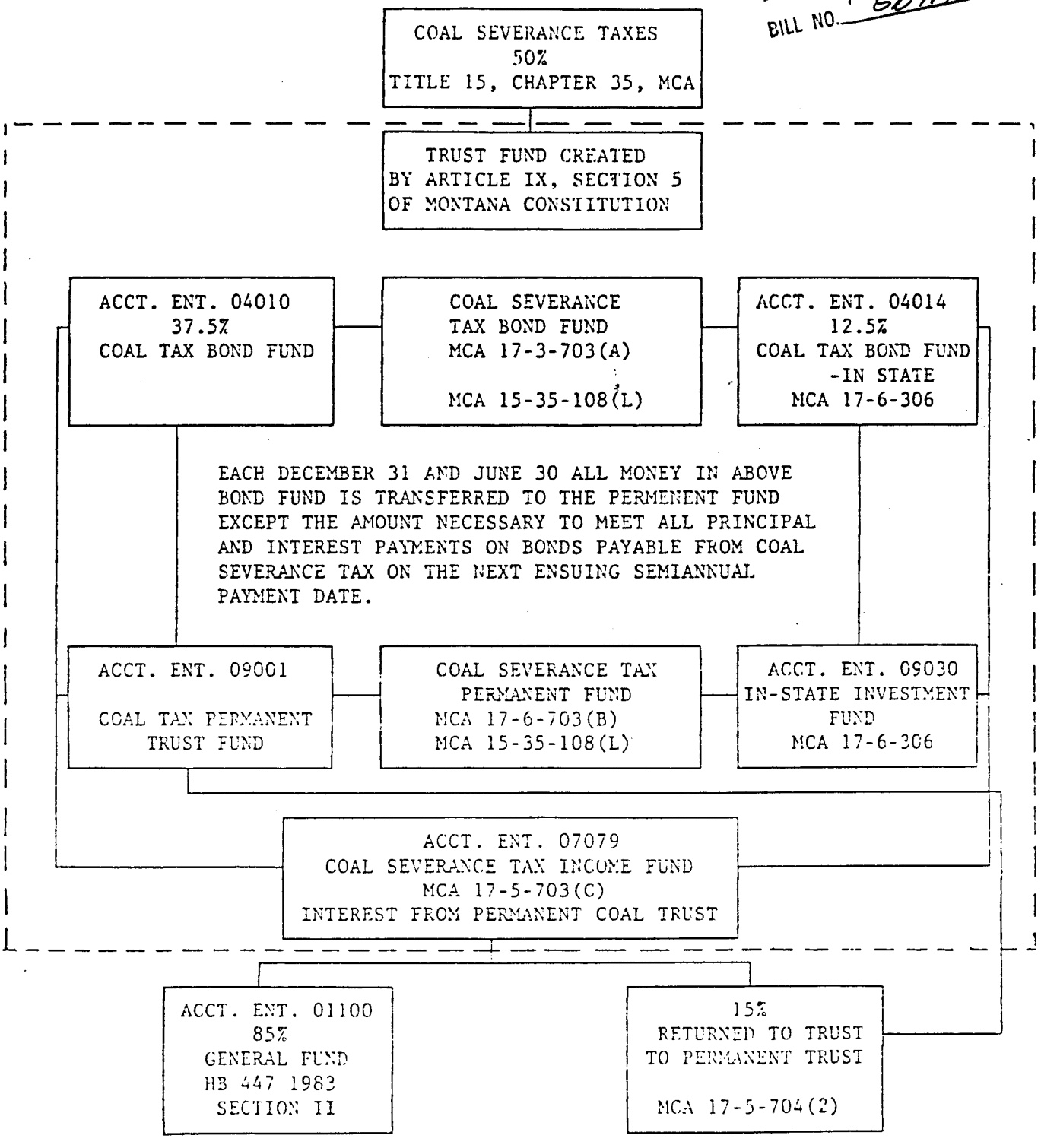

L 1985 passed a bill to direct 15% of the earnings from the in-state investment fund back to that fund.

SENATE TAXATION
EXHIBIT NO. 4
DATE 4/19/89
BILL NO. SB117

COAL SEVERANCE TAX DISTRIBUTION
According to the Provisions of Senate Bill No. 228
50th Legislature

	Fiscal Years 1988 and 1989	After June 30, 1989
Permanent Trust	50.000%	50.000%
Highway Reconstruction	12.000	12.000
Alternative Energy	1.710	1.710
Local Impact	1.520	6.650
Education Trust	.000	7.600
Equalization Aid	16.800	3.800
County Land Planning	.380	.380
Renewable Resources	.475	.475
Parks Acquisition and Cultural	.000	1.900
State Library	.380	.380
Conservation Districts	.190	.190
Water Development	.475	.475
Growth in Agriculture	.760	.760
General Fund	15.310	13.680
TOTALS	100.000%	100.000%

7152a/C:JEANNE\WP:jj

SENATE TAXATION
EXHIBIT NO. 49
DATE 1/19/89
BILL NO. SB117

COAL SEVERANCE TAX DISTRIBUTION
Effective July 1, 1987, through June 30, 1989
Prepared for the Coal Tax Oversight Subcommittee
By Paul E. Verdon, Staff Researcher

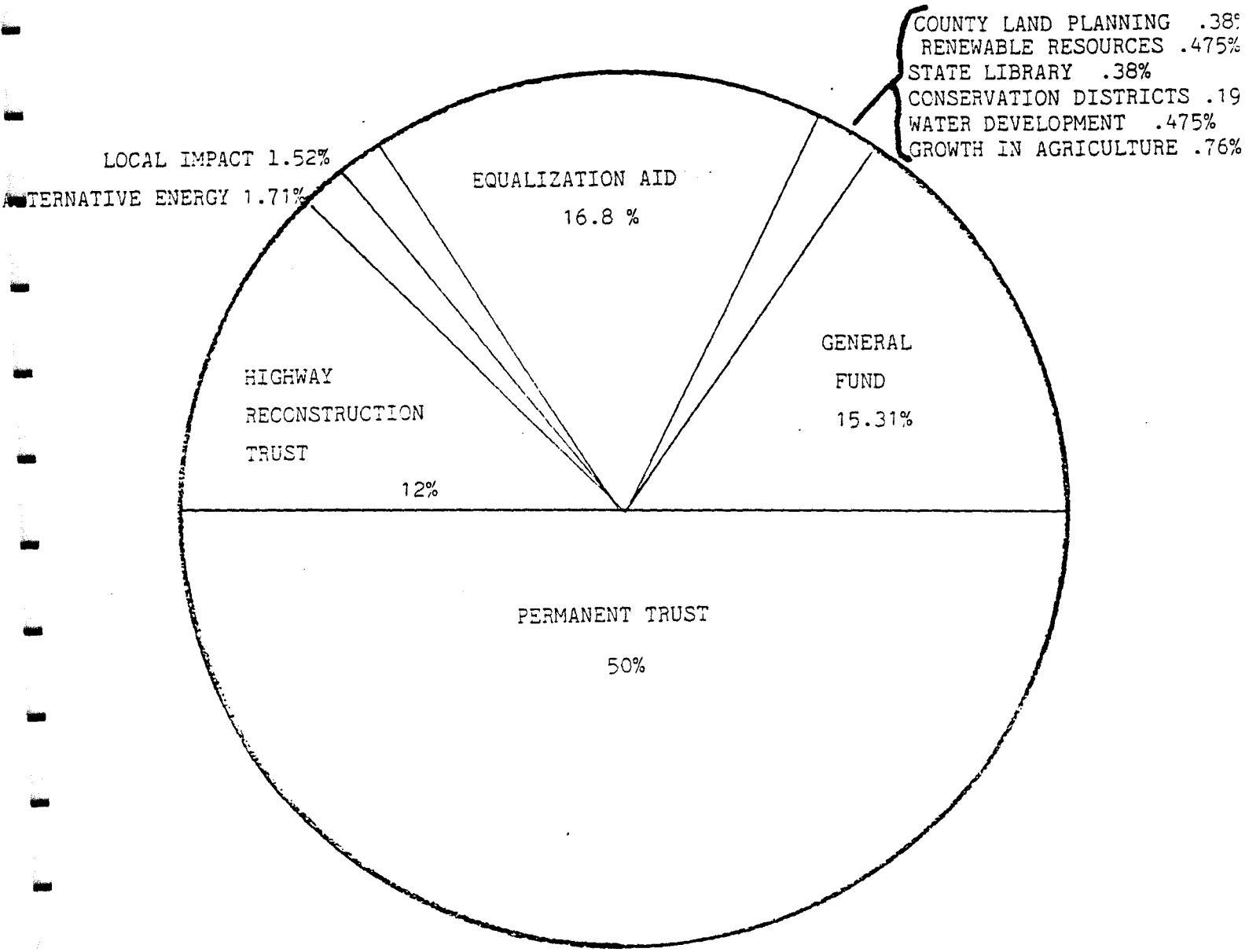

SENATE TAXATION
EXHIBIT NO. 46
DATE 1/19/89
BILL NO. SB 117

COAL SEVERANCE TAX DISTRIBUTION
Effective after June 30, 1989
Prepared for the Coal Tax Oversight Subcommittee
By Paul E. Verdon, Staff Researcher

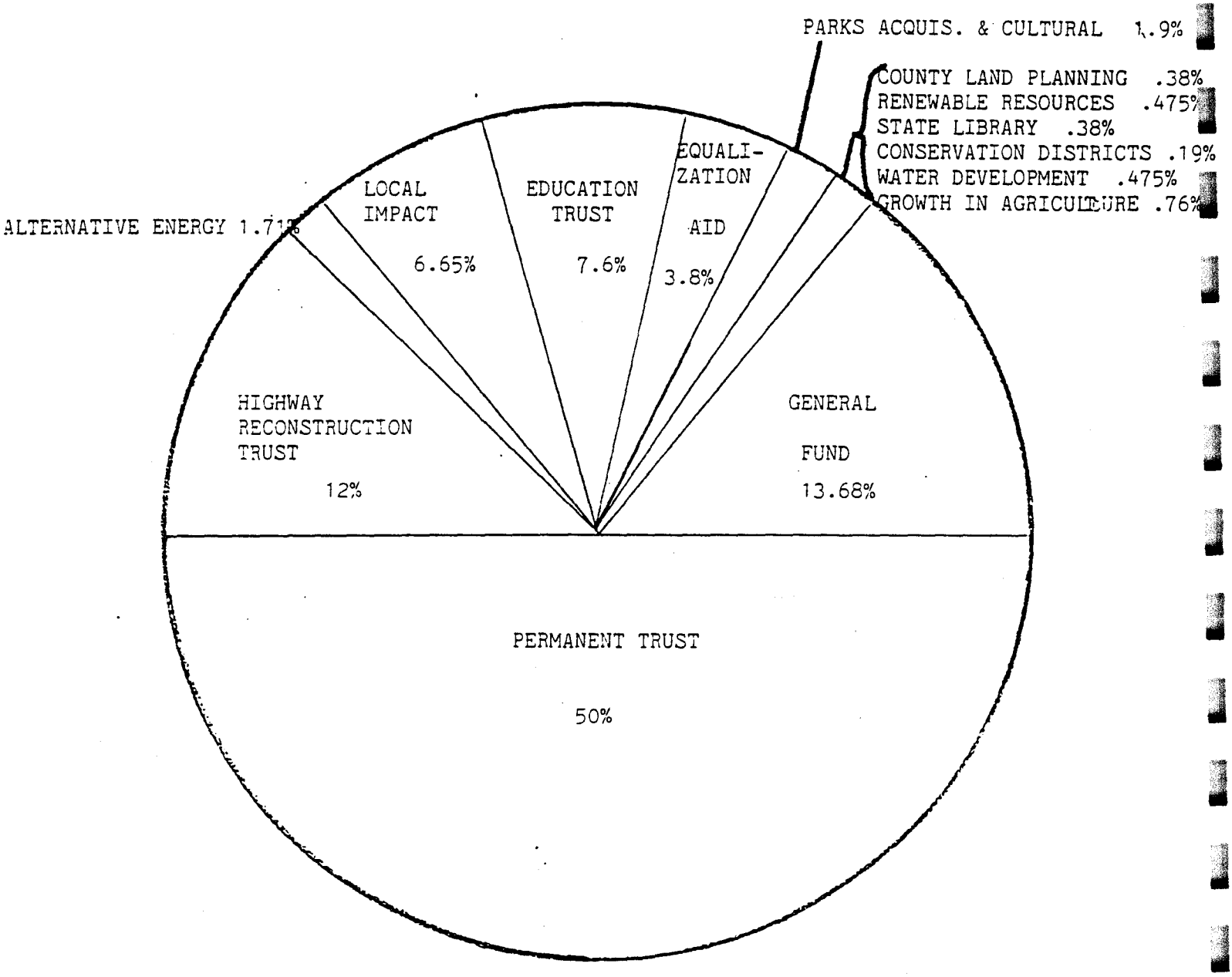

COAL SEVERANCE TAX DISTRIBUTION

Effective July 1, 1987 through June 30, 1989

Prepared for the Coal Tax Oversight Subcommittee
By Paul E. Verdon, Staff Researcher

SENATE TAXATION
EXHIBIT NO. 4C
DATE 1/19/89
BILL NO. SB 117

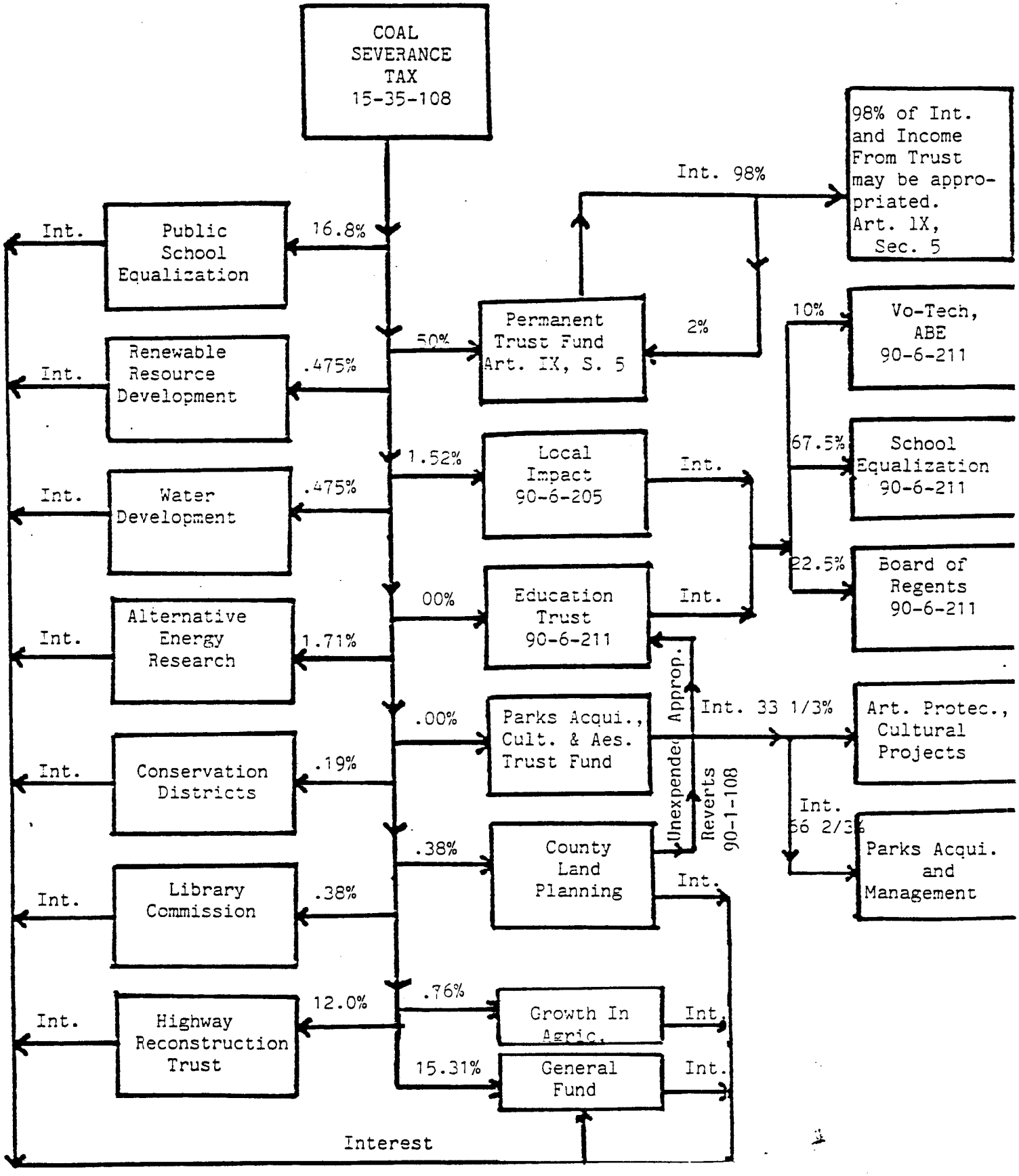

COAL SEVERANCE TAX DISTRIBUTION

Effective after June 30, 1989
Prepared for the Coal Tax Oversight Subcommittee
By Paul E. Verdon, Staff Research

SENATE TAXATION
EXHIBIT NO. 4d
DATE 1/19/89
BILL NO. SB117

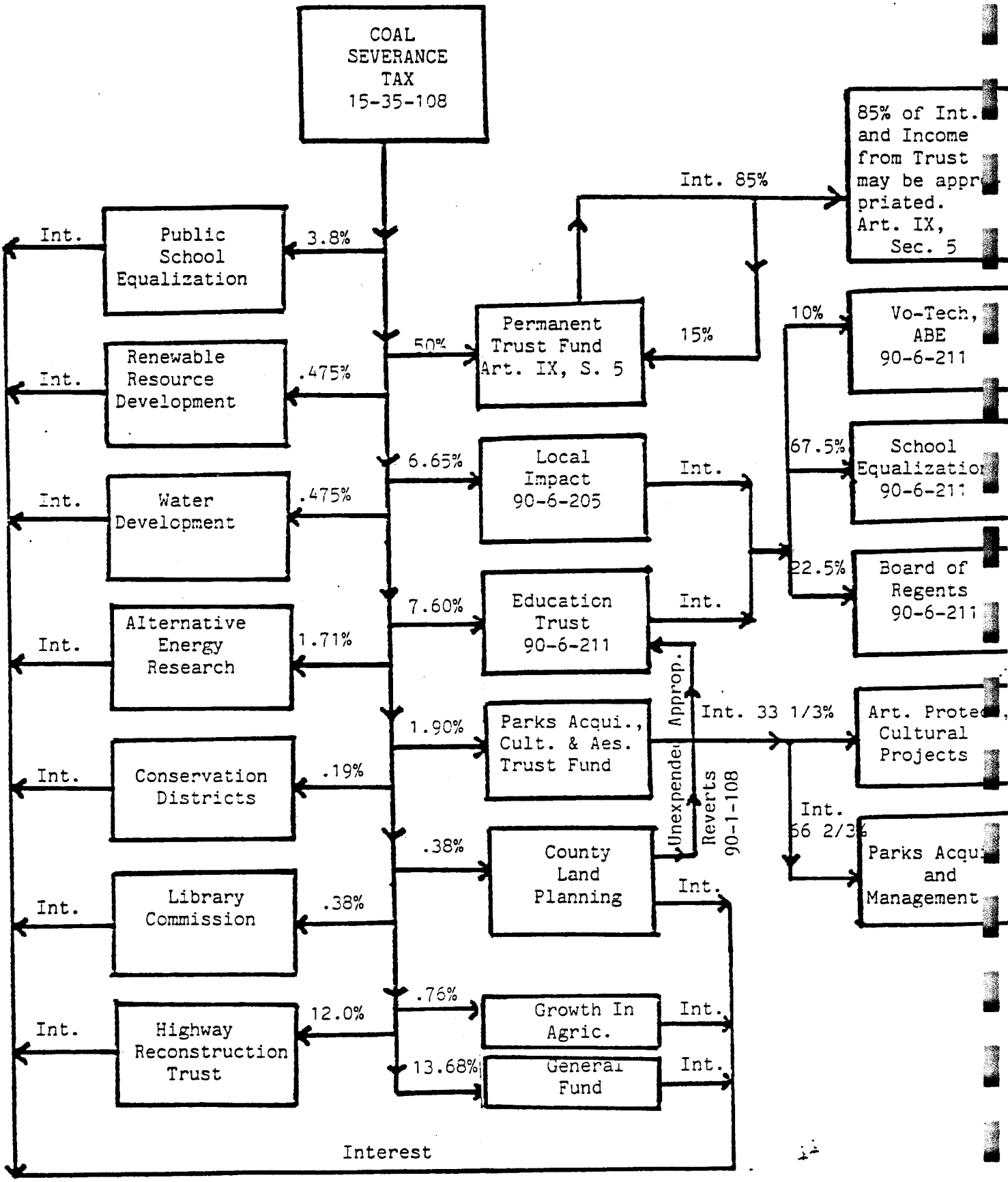

COAL SEVERANCE TAX

The coal severance tax is imposed on all coal production in excess of 20,000 tons per company per calendar year. However, producers of 50,000 tons or less in any calendar year are exempt from the tax. The tax rate for FY88 was 30% of value for coal with a heating quality of 7,000 or more BTU's per pound. Coal with a lower BTU rate was taxed at 20% in FY88. HB 252, passed by the 50th Legislature, reduced these rates because the level of coal production in FY 88 exceeded 32.2 million tons. The following table displays the tax rates implemented by HB 252.

	HB 252 Tax Rates	
	< 7,000 BTU	≧7,000 BTU
FY 88	20%	30%
FY 89	17%	25%
FY 90	17%	25%
FY 91	13%	20%
FY 92 & after	13%	15%

The distribution of the tax has been modified several times since the enactment of the tax in 1975. The current and future statutory tax distributions are presented in the following table. SB 228, passed by the 50th Legislature, changed the allocation effective July 1, 1987 and again on July 1, 1989.

COAL TAX DISTRIBUTION TABLE

ACCT. ENTITY	ACCOUNT NAME	EFFECTIVE JULY 1, 1987	EFFECTIVE JULY 1, 1989
01100	General Fund	15.314%	13.680%
02132	Agriculture Act	0.760%	0.760%
02403	Public School Equalization	16.796%	3.800%
02405	State Library	0.380%	0.380%
02424	Highway Reconstruction Trust	12.000%	12.000%
02434	Conservation Districts	0.190%	0.190%
02437	Alternative Energy Research	1.710%	1.710%
02444	County Land Planning	0.380%	0.380%
02445	Local Impact	1.520%	6.650%
04008	Renewable Resources Bond	0.475%	0.475%
04011	Water Development	0.475%	0.475%
09001	Permanent Trust	50.000%	50.000%
09004	Park Acquisition Trust	0.000%	1.900%
09005	Education Trust	0.000%	7.600%
	TOTALS	100.000%	100.000%

Coal severance tax revenues are dependent on the contract sales price per ton of coal and the number of tons produced. Since most of Montana's coal is sold to utilities under long-term contracts, prices are usually allowed to increase by inflation indicies specified in the contracts. However, with lower demand and competitively priced other fuels, coal prices are expected to remain constant during the forecast period.

The other factor that affects the price of coal is the deductibility of royalty payments from the contract sales price. The 48th Legislature approved legislation that phases in the royalty deduction over a period of 3 years. These deductions have been included in the price forecasts.

Production levels are influenced by the demand for electrical power and the price of other fuels such as oil and natural gas. Based on information from the major coal producers, production is anticipated to decrease substantially during FY89 and then decline modestly in FY90 and FY91.

The 1985 legislature enacted a ⅓ tax rate reduction on increased production due to new or revised contracts signed during a 2 ½ year "window of opportunity." HB 252 continued this credit for "incremental production", which results in effective tax rates of 10% and 15% for the two BTU levels. The new production resulting from this legislation and the credits claimed are included in the revenue forecasts.

A dispute involving the state's authority to tax coal mined on Crow Indian land has been resolved in the US Supreme Court in favor of the Crow Indian Tribe. Any future production on these lands has been excluded from the revenue forecasts.

PERMANENT TRUST
November 1988

C/A		Permanent Trust Fund A/E 9001	Coal Permanent Trust Income A/E 08019	Revenue Coal Tax Bond Fund A/E 04010	Commerce Coal Tax Bond Fund A/E 04014	In State Investment Fund A/E 09030	TOTAL
1601	Mt. Mortgages	1,588,828					1,588,828
1613	STIP Transfers	22,907,800	12,693,400	9,633,400	1,550,100	24,700,200	71,484,900
1207	Commercial Notes					29,051,975	29,051,975
	Source: SBAS 411's November						
	Corporate Bonds						240,917,343
	U.S. Treasury Notes & Bonds						43,881,307
	U.S. Government Special Revenue						8,068,673
							394,933,026

Source: November LOT Book

SENATE TAXATION
EXHIBIT NO. 7 pg 1
DATE 1/19/89
SB 117

#7

NORTHERN PLAINS RESOURCE COUNCIL

Field Office
Box 858
Helena, MT 59624
(406) 443-4965

Main Office
419 Stapleton Building
Billings, MT 59101
(406) 248-1154

Field Office
Box 886
Glendive, MT 59330
(406) 365-2525

Bob Dozier 1/19/89
Mr Chairman and members of the committie;

Again the question arises, what purpose does the Coal Tax Trust fund serve? I sometimes feel the coal tax trust fund is seen as a giant piggy bank. But that is not it's sole purpose. let us briefly touch on 4 reasons why the fund was created.

1. The cost of environmental RISK. I must point out that in the area of environmental risk, complete land reclamation is still a scientific uncertainty in our climate.(attach A.) Also there is some risk to human health and vegetation because of air pollution from coal processing. Also the disturbances to water aquifiers and potential changes in rainfall patterns is still the subject of debate. (attach B.) These are real risks that we have no way of assessing final cost of.

2. The social cost to a people and a way of life are impossible to quantify. Substantial reserch documents the dramatic and in many cases, unwanted social changes that will be foisted on the people in our state. To ignore the human costs here would be wrong.

3. The boom and bust cycle costs are the most often ignored. It is estimated the coal development projects will have a 30 to 40 year life. The experience all around the country has been that when the last dragline stops, the economic schock to a region catches it's citizens in a financial squeeze. Part of the cost of a project is the cost of stopping it and what is does to the economics that had to be built to accommodate it in the first place. A difficult cost to predict, but one that cannot be ignored.

4. And last the loss of a non-renewable resource to future generations. future generations will not have the use of coal severence taxes to balance their budgets. The mining of coal is truely a one time harvest. We must maintain the coal tax trust fund. We cannot obligate the next generation to solve the problems without some funding mechanism.

Attach 'A'

SENATE TAXATION
EXHIBIT NO. 7 pg2
DATE 1/19/89
BILL NO. SB117

A September 29, 1974 issue of the New York Times quotes the reclamation chief for North American Coal Company in a discussion of strip mining in the Northern Great Plains as saying:

> "We have the technology to turn the land back to productivity if it is just grazing or pasture. But, if you are talking about crop land, agricultural soil – and that's maybe 50% of the area we're going to strip – we just don't know yet if we can do it. The deeper you go after lignite – 80, 90 or 100 feet – the more you bring up a lot of very bad stuff; and the rainfall here, it's not anything like we're used to in the east. But, on the other hand, if you go into irrigation with the saline seep problem we've got out here, you could be creating a monster."

If anyone doubts the risks and costs attached to the potential destruction of the land by strip-mining, that quote should raise serious questions.

Attach - 'B'

SENATE TAXATION
EXHIBIT NO. 7 Pg 3
DATE 1/19/89
BILL NO. SB 117

a Ford Foundation report titled, "A Time to Choose," questions are raised about the strip mining of coal and its effect on water. It reports:

> "The problems posed by surface mining in the west also affect water supplies in most of the near-surface coal beds in the west. The coal seams trap underground water. Removal of the coal seam would disrupt the aquifer and diminish the region's water supply."

#8

MONTANA CHAPTER SIERRA CLUB

SENATE TAXATION
EXHIBIT NO. 8
DATE 1/19/89
BILL NO. SB 117

415 NORTH 17TH AVENUE • BOZEMAN, MONTANA 59715 • (406) 587-9782

SIERRA CLUB TESTIMONY IN OPPOSITION TO SB 117
KIM WILSON, LOBBYIST

The Sierra Club opposes Senator Keating's SB 117. The original decision by the people of Montana to put a portion of coal tax revenues in trust was a wise and forward looking policy. That policy rested on two points. First, there was the desire to put some of the revenue from the development of a non-renewable resource into trust as a means of cushioning the people of Montana from the changes that would occur when that resource runs out.

Second, the policy recognized the danger in allowing the legislature to appropriate all of the coal tax revenues for general expenses. If the state were to continue to spend based on levels of coal tax received, it would be in a difficult position when that source of funding runs dry.

This trust, which is barely 10 years old, was meant for "future generations." We should not be working to cap the trust when it is less than a generation old. We do not yet know the full impacts of coal development in Montana. Nor do we know how many "rainy days" we may have ahead. It is unsound policy for the state to tamper with the trust at this time, and we urge you to vote against this measure.

WITNESS STATEMENT

TAXATION
EXHIBIT NO. 9
DATE 1/19/89
BILL NO. SB 117 DATE: 19 Jan 89

#9

NAME: Margaret S Davis

ADDRESS: 816 Flowerree Helena 59601

PHONE: 443-3484

REPRESENTING WHOM? League of Women Voters of MT

APPEARING ON WHICH PROPOSAL: SB 117

DO YOU: SUPPORT? _____ AMEND? _____ OPPOSE? X

COMMENTS: The LWVMT opposes SB 117 and the capping of the Permanent Coal Tax Trust Fund. The Fund serves as an on-going source of state revenue that moderates dependence on direct coal tax revenue, which is subject to swings of international price and tonnage produced in response to demand. The principal serves to support bonding programs and similar economic development initiatives. The principal must grow so that the fund keeps pace with inflation and meets future fiscal needs of the state.

PLEASE LEAVE ANY PREPARED STATEMENTS WITH THE COMMITTEE SECRETARY.

DATE 1/18/89

COMMITTEE ON Taxation

VISITORS' REGISTER

NAME	REPRESENTING	BILL #	Check One Support	Check One Oppo
Marvin Barber	Mt. assessors	97		X
Bob Dozier	No. Plains Res. Council	117		X
Bryant Quick	Northern Plains Resource Council	117		X
Greg Groppe	Office of Public Instruction	97		X
Phil Campbell	MEA	117		X
Deborah Schlenzi	Mt Fib assoc.	117		
[illegible]	LWV	117		X
Kim Wilson	Sierra Club	117		X
Chris Kaufman	MEIC	117		X
Don Ingels	Mt Chamber of Commerce	117	X	
Dick MacKay	MT Coal Council	117	✓	
Chet Blaylock	S.D. #43	117		X
[illegible]	MOMTAX	117	✓	
Pat Ringling	MAPP			X
Margaret St Jean	LWVMT			X
Ann Franovske	MAPP	97		
Don Ingels	Mt Chamber of Commerce	97	✓	
Phil Campbell	MEA	97		X
Gloria Hermann	MT Cultural Advocacy	117		X

(Please leave prepared statement with Secretary)